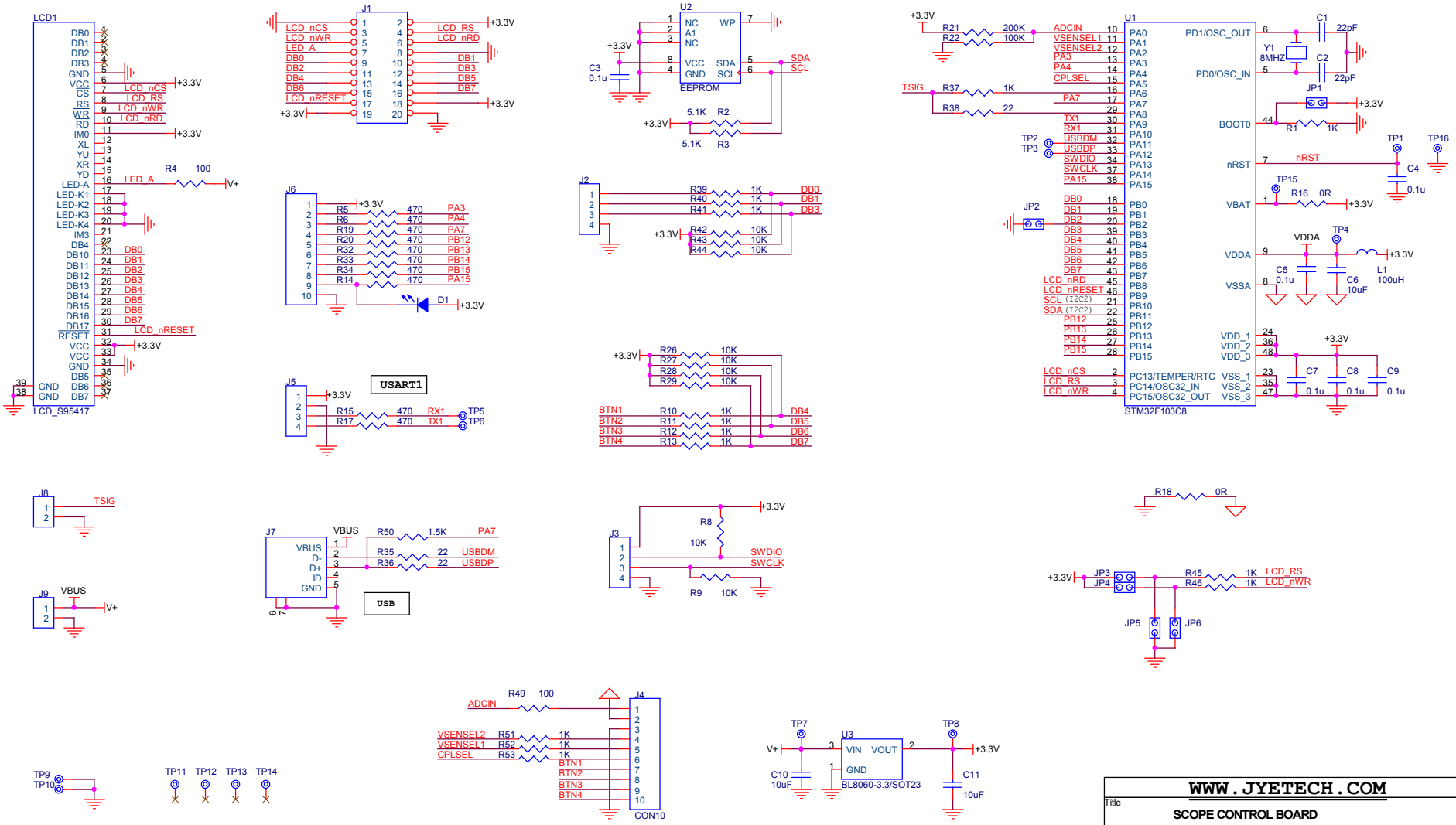
LCD1
LCD_S95417
J1
J2
J3
J4
J5
J6
J7
J8
J9
U1
STM32F103C8
U2
EEPROM
U3
BL8060-3.3/SOT23
USART1
USB
CON10
WWW.JYETECH.COM
Title
SCOPE CONTROL BOARD
Size
B
Document Number
105-13800-00H
Rev
00H
Date: Tuesday, June 13, 2017
Sheet 1 of 1