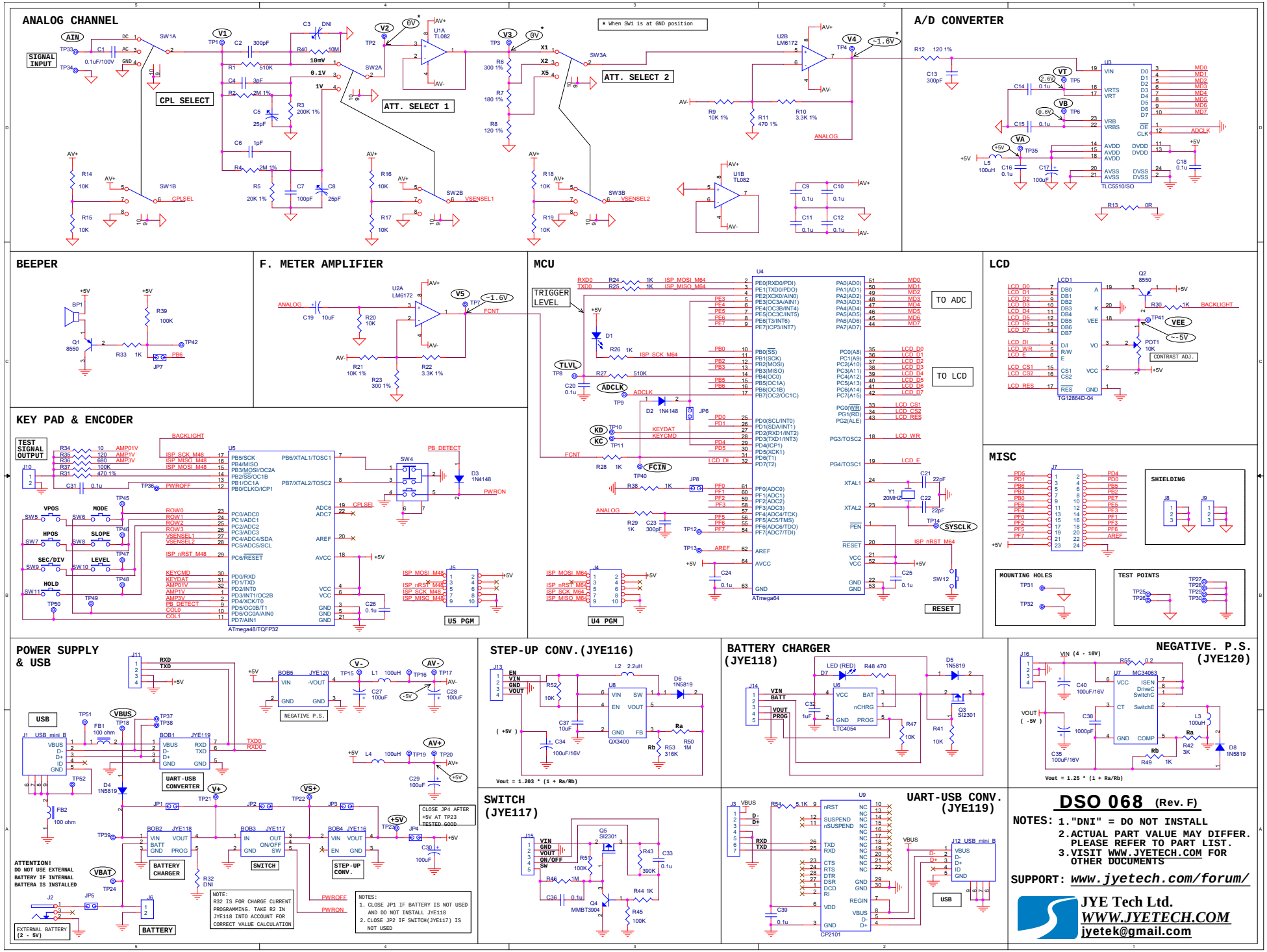
ANALOG CHANNEL
SIGNAL INPUT
CPL SELECT
ATT. SELECT 1
ATT. SELECT 2
* When SW1 is at GND position
A/D CONVERTER
TLC5510/SO
BEEPER
F. METER AMPLIFIER
MCU
ATmega64
TO ADC
TO LCD
TRIGGER LEVEL
RESET
U4 PGM
LCD
TG12864D-04
CONTRAST ADJ.
KEY PAD & ENCODER
TEST SIGNAL OUTPUT
ATmega48/TQFP32
U5 PGM
MISC
SHIELDING
MOUNTING HOLES
TEST POINTS
POWER SUPPLY & USB
UART-USB CONVERTER
BATTERY CHARGER
SWITCH
STEP-UP CONV.
BATTERY
NEGATIVE P.S.
STEP-UP CONV.(JYE116)
Vout = 1.203 * (1 + Ra/Rb)
BATTERY CHARGER (JYE118)
LTC4054
SWITCH (JYE117)
UART-USB CONV. (JYE119)
CP2101
NEGATIVE. P.S. (JYE120)
Vout = 1.25 * (1 + Ra/Rb)
ATTENTION! DO NOT USE EXTERNAL BATTERY IF INTERNAL BATTERA IS INSTALLED
EXTERNAL BATTERY (2 - 5V)
NOTE: R32 IS FOR CHARGE CURRENT PROGRAMMING. TAKE R2 IN JYE118 INTO ACCOUNT FOR CORRECT VALUE CALCULATION
NOTES: 1. CLOSE JP1 IF BATTERY IS NOT USED AND DO NOT INSTALL JYE118 2. CLOSE JP2 IF SWITCH(JYE117) IS NOT USED
CLOSE JP4 AFTER +5V AT TP23 TESTED GOOD
DSO 068 (Rev. F)
NOTES: 1."DNI" = DO NOT INSTALL
2.ACTUAL PART VALUE MAY DIFFER. PLEASE REFER TO PART LIST.
3.VISIT WWW.JYETECH.COM FOR OTHER DOCUMENTS
SUPPORT: www.jyetech.com/forum/
JYE Tech Ltd.
WWW.JYETECH.COM
jyetek@gmail.com